Tyristor Gate Driver Le-SCR-1

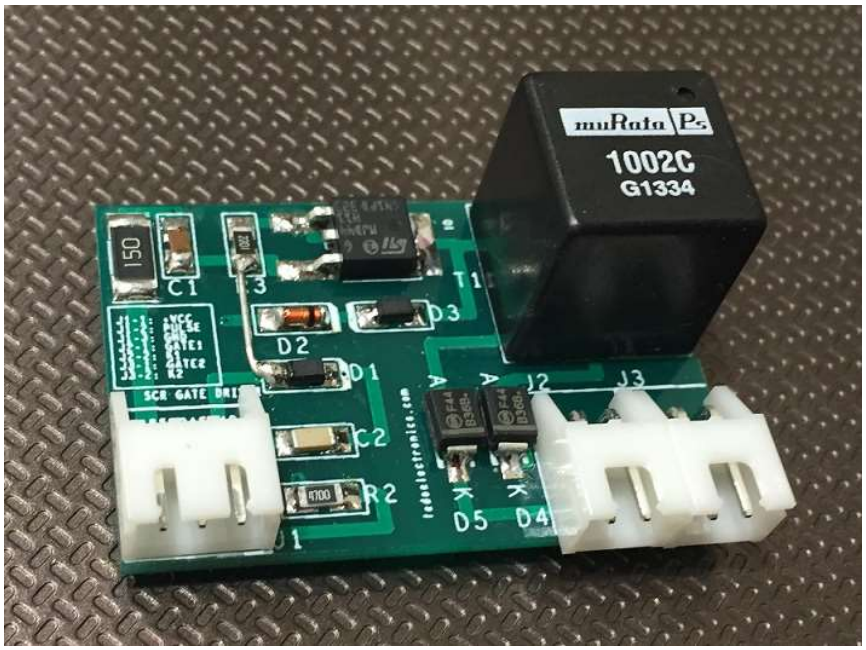

- **Power supply Voltage: 9…24V DC**
- **Isolation Voltage: 4000 V**
- **Two Isolated Outputs**

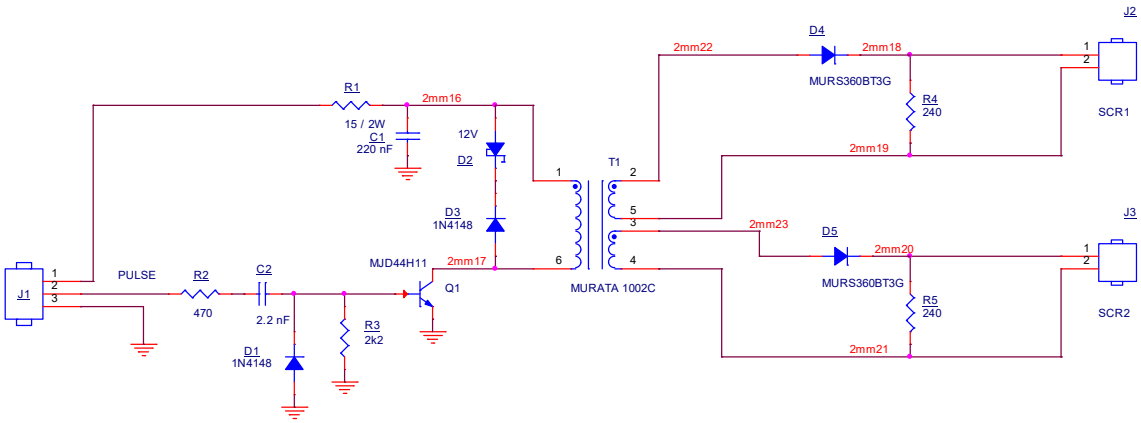

Ing. José Emilio Ledo Galano

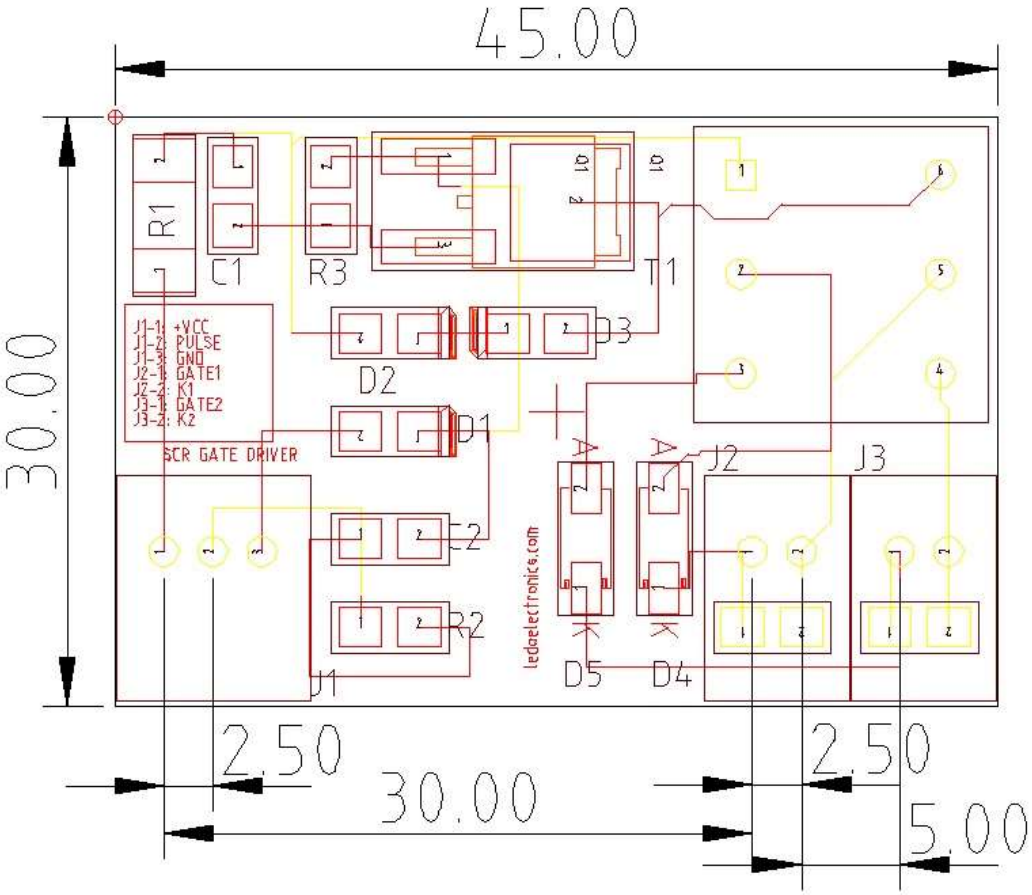
45.00
30.00
R1
C1
R3
T1
D3
D2
D1
J1-1: +VCC
J1-2: PULSE
J1-3: GND
J2-1: GATE1
J2-2: K1
J3-1: GATE2
J3-2: K2
SCR GATE DRIVER
J2
J3
C2
R2
J1
D5
D4
ledaelectronics.com
2.50
30.00
2.50
5.00